12/21/10

Ordinance No. O-10-31

VILLAGE OF CAMPTON HILLS

AN ORDINANCE APPROVING REZONING TO A PLANNED UNIT DEVELOPMENT DISTRICT (NORTON LAKE, ROUTE 64, EAST OF FOX MILL AND WEST OF ARBOR CREEK SUBDIVISION)

WHEREAS, Norton Lake Development, LLC, as successor to Hudson T. Harrison, owner of that property in the Village of Campton Hills, Kane County, Illinois on Illinois Route 64, East of Fox Mill Subdivision and West of Arbor Creek Subdivision, legally described on the Master Planned Unit Development Plan ("Master Plan") (hereafter the "Subject Property") attached hereto as Exhibit A or his successors or assigns ("Developer"), seeks to develop the Subject Property; and

WHEREAS, Developer has filed with the Village of Campton Hills, Kane County, Illinois (the "Village") a petition (the "Petition") 1) to rezone the Subject Property from existing F (Farming) and F-2 (Agricultural Related Sales, Service, Processing, Research, Warehousing and Marketing; Special Uses) Zoning Districts to the Planned Unit Development ("PUD") District; and 2) for approval of the Master Planned Unit Development Plan (Exhibit A) in anticipation of filing the Final Plat of Subdivision for that portion of the Subject Property known as Norton Lake Unit 1, said Plat being attached hereto as Exhibit B; and

WHEREAS, Developer proposes to develop the Subject Property in accordance with the provisions and standards of Village Ordinance No. O-09-42 (Article XII, Planned Unit Development District) except as modified by the terms and provisions of this Ordinance and its Exhibits; and

WHEREAS, Unit 1 and the future Unit 2 have been planned together under the Norton Lake Master Plan for purposes of contributing and calculating open space, planning infrastructure, calculating school and park donations, and for planning and constructing other amenities; and

WHEREAS, Unit 1 contains more than 40% open space, and Unit 2, when platted, will contain less than 40% open space, but together, Unit 1 and Unit 2 have the requisite Open Space, all as shown on the Norton Lake Master Plan; and

WHEREAS, pursuant to Village Resolution No. R-09-30 dated December 17, 2009, the Village has approved a certain Preliminary Plan for development of the Subject

Property that includes both Unit 1 and Unit 2, subject to the terms and conditions of said Resolution No. R-09-30; and

WHEREAS, the Petition and a plat which was substantially equivalent to the Norton Lake Master Plan was referred to the Plan Commission of the Village, and the Plan Commission, after due publication and due notice, held a public hearing pursuant to law and the Plan Commission made recommendations to the Corporate Authorities of the Village relative to rezoning of the Subject Property to the PUD Zoning District; and

WHEREAS, the President and Board of Trustees of the Village of Campton Hills, Kane County, Illinois do hereby find that:

1. The Subject Property as legally described in Exhibit A is a tract of land consisting of approximately 113.25 acres that is under single ownership or unified control and will be developed under single ownership or unified control.

2. The uses permitted in this PUD Zoning Ordinance are of the type and located as to exercise no undue detrimental influence upon surrounding properties and are appropriate for the vicinity.

3. Based exclusively upon determinations of, and permits issued by, the Illinois Environmental Protection Agency ("IEPA") and the Wasco Sanitary District ("WSD") as to sanitary sewer matters and treatment, the said uses will not endanger the public health, welfare or safety, nor substantially diminish or impair property values in the Wasco Sanitary District; and

WHEREAS, the President and Board of Trustees of the Village agree to rezone the Subject Property to the PUD Zoning District subject, however, to each and every one of the conditions and restrictions and variations provided herein:

NOW, THEREFORE, BE IT ORDAINED by the President and Board of Trustees of the Village of Campton Hills, Kane County, Illinois that:

Section 1: Findings

The President and Board of Trustees find that the facts stated in the preamble of this Ordinance are true and correct and are hereby incorporated into the text of this Ordinance to the same extent as if each had been set forth herein its entirety.

Section 2: Planned Unit Development Zoning

The Subject Property is hereby rezoned as PUD District subject to each and every one the following terms and conditions:

A. Developer concurrently has submitted a Final Plat (the "Plat") for approval for Unit 1, a copy of which is attached as Exhibit B and a part hereof, and that part of the Subject Property set forth on the Final Plat for Unit 1 shall be developed substantially in accordance with said Plat.

B. 1. Residential lots to be developed are numbered on the Master Plan as 1 through 106, inclusive; Lots 107 and 108 are an existing farm property which, while part of Norton Lake Subdivision, will not be subdivided or developed at this time but may be considered for development at a future date. The agricultural and current retail uses and operations on Lots 107 and 108, including the husbandry of livestock and current and future storage in the barns, shall be permitted as legal non-conforming uses until such time as Lot 107 shall be developed or such uses and operations are abandoned. Developer shall be permitted to farm or to allow farming with permission of property owners, on any portion of the Subject Property other than Lots 109, 111, 112 and 115 provided that farming operations do not create a nuisance to residents of any of Lots 1 through 106. Prior to issuing any building permit for any residential lot on the Subject Property, or upon the earlier request of School District 303, Developer shall convey, in the manner set forth in the Village Ordinances, merchantable title to Lot 109 to Community Unit School District 303. Lots 110, 113, 114, and 116 through 120 shall become dedicated open space through the recording of the Master Plan (Exhibit A). Within 90 days of the date of recording the Final Plat for Unit 1, Developer shall convey merchantable title to Lot 112 to the Wasco Sanitary District. Within 90 days of the date of recording the Final Plat for Unit 1, Developer shall convey merchantable title to Lot 111 (right–of-way adjacent to Route 64) to the Illinois Department of Transportation. Lots 114, 115, 117 and 120 are subject to an on-site irrigation easement in favor of the Wasco Sanitary District as set forth on the Master Plan (Exhibit A) and said on-site irrigation easement is subject to all laws and permitting requirements at the time of construction, including the laws, requirements, Ordinances and Code of the Village. The Lot enumeration set forth on the Norton Lake Master Plan is carried over in the Final Plat of Unit 1 and, at the time presented, shall be carried over to the final plat approval of Unit 2.

2. As shown on the Plat for Unit 1, all rights-of-way are dedicated to the Village. The Developer shall maintain all portions of the rights-of-way, including but not limited to trees and landscaping and all sidewalks and bike paths--but excluding paved portions of roadways designed for motor vehicular traffic and storm water piping and curb inlets within the curb lines until the Developer has transferred responsibility for such maintenance to the Norton Lake Homeowners Association, Inc. ("HOA"). After the Developer has transferred responsibility to the HOA, the HOA shall maintain all rights-of-way (excluding paved portions of roadways designed for motor vehicle traffic and storm water piping and curb inlets within the curb lines). In addition, the Developer (or successor HOA following turn-over) shall maintain all open space, including bodies of water, wetlands, and bike paths and Parcel 2 of Unit 2 of Fox Mill Subdivision as defined in Exhibit E. Within 90 days of the date of recording of the Final Plat for Unit 1, the Developer shall, as set forth in Paragraph R below, convey ownership of Lot 115 to the Village. The Developer (or successor HOA following turn-over) shall maintain and be responsible for liability insurance for Lot 115 until the earlier of: (a) the time when the Village improves said Lot with any improvements (including playground equipment) or (b) ten (10) years from date of the Deed conveying ownership to the Village. The installation of pavers and two benches on Lot 115 by Developer, according to the Landscape Plan of William James Spear and Associates dated May 20, 2010, shall not constitute an "improvement" for purposes of triggering the

maintenance of Lot 115 by the Village. Moreover, the Developer/HOA shall continue to maintain the bike path on Lot 115 after the Village assumes all other maintenance responsibility for Lot 115. Other than those portions of the system that are the obligation of individual homeowners, the Wasco Sanitary District is obligated to maintain the entirety of its system in the Subject Property regardless of location and therefore neither the HOA nor the Village shall be responsible for the maintenance or repair of those structures or roadways disturbed by the Wasco Sanitary District.

3. Except as permitted herein on Lots 107 and 108, the Subject Property shall be for residential use only and no commercial or business occupations may occur on the Subject Property except for Home Occupations, as defined herein, and also except for the construction, development, sale and rental of the Subject Property or portions thereof by Developer and used by Developer as offices. For purposes of this Ordinance, "Home Occupation" shall mean a gainful occupation, profession, business or commercial activity engaged in by one or more occupants of a dwelling as an accessory use, incidental and secondary to the principal use of the dwelling, that shall meet the following requirements: the use shall be operated entirely within the dwelling, except for swimming lessons in an enclosed yard and swimming pool, and only by the occupant of the dwelling; the use shall not permit the conduct of retail business, other than by mail or off-site distribution; the use shall not permit any manufacturing business or repair shop of any kind; the use shall not be operated in any accessory building; the use shall not include more than one outside employee; the use shall not include the arrival and/or departure of more than one outside employee from the residence and/or property; the use shall not permit any commercial vehicles in excess of 3/4 ton inside or outside of any buildings on the property; the use shall not permit more than one (1) commercial vehicle 3/4 ton or less; the use shall not permit the parking of more than three (3) cars simultaneously on the property or on any nearby road right-of-way and only between the hours of 9:00a.m. and 5:00p.m., for customers or clients; the use shall not permit delivery by other than private passenger vehicles, parcel service, or letter carrier for commercial purposes; the use shall not permit teaching, musical instruction, swimming instruction, dancing and/or other instruction and counseling of more than three persons at a time; the use shall not permit any exterior display, signage, storage or evidence of the home occupation, the use shall not allow the operation of a barber shop or beauty parlor with more than one (1) chair. Any Home Occupation use that creates objectionable noise, fumes, odor, dust, vibrations, or electrical interference outside the structure, or more than normal residential traffic, or a nuisance to neighboring property, shall be prohibited.

C. Substantially contemporaneously with the approval of this Ordinance the Village shall establish a special service area to be known as "Village of Campton Hills Backup Special Service Area Number 4" ("Backup SSA No. 4") consisting of the Subject Property but excepting therefrom Lots 109, 111, 112 and 115, and initially excluding Lots 107 and 108,for the purpose of performing any act or acts which shall be the responsibility of the Developer and/or the HOA pursuant to this Ordinance in the event that the Developer and/or the HOA fail to perform such act or acts after notice as provided for in the ordinance establishing Backup SSA No. 4. At any time hereafter, if Lot 107 is subdivided to provide

for additional lots, as provided for in this PUD Ordinance, Backup SSA No. 4 may be amended by the Village of Campton Hills to add Lots 107 and 108 to the Backup SSA No. 4, subject to all of the provisions of Backup SSA No. 4, including levying of taxes applicable to the Subject Property. Developer and Owners of record of the Subject Property, and of Lots 107 and 108, agree to waive all notice and to waive all requirements of a hearing as otherwise provided by statute upon the initial creation of Backup SSA No. 4 and the subsequent amendment thereof as herein provided and, accordingly, agree to the immediate effectiveness of Backup SSA No. 4 and upon amendment, such amendment thereto, and shall secure waivers of such notice and such hearing from all owners of the Subject Property and all electors residing on the Subject Property, if any.

D. Developer of the Subject Property and the WSD have secured IEPA permits for sanitary sewer connections for the construction of sanitary sewers for the entire development, (excluding Lots 107 and 108 depicted on the Master Plan (Exhibit A), for 106 single family lots. Developer is securing approval, by this Ordinance, of the Unit I Plat (Exhibit B) for 66 single family lots. Developer anticipates seeking plat approval of the remaining 40 lots in the Plat of Unit 2 at some future time. The dedication of roads and other facilities which are to be dedicated to the Village shall occur at the time of the approval of the respective Plats for Units 1 and 2. Therefore, the requirements of posting surety bonds, letters of credit or cash deposits in an amount equal to not less than one hundred ten percent (110%) of the Village Engineer's estimated costs of public improvements within each particular Unit shall be met prior to Village execution of the respective Plats as approved and prior to recording.

E. Sidewalks shall not be required on the east side of Norton Lake Drive from lot 57 through lot 70 inclusive, stopping at the bike path on the north. Sidewalks also shall not be required for lots 16 through 32, inclusive, on Norton Lake Circle (but sidewalks shall be provided on the southerly side of Lots 16, 32, 33, 34, 44 and 45). At such time as the Village shall direct, the Developer (or HOA, as the case may be) shall construct the connection of the Bike Path to Arbor Creek's existing bike path to the same standards as the bike path in NORTON LAKE. The Village may install additional scenic pathways on open space areas provided that installation and maintenance of said additional pathways shall be at the Village's sole expense.

F. Responsibility for management and obligations of the HOA shall be turned over to the owners of each unit of the Development within sixty (60) days of the election of a majority of the board, other than the developer, by unit owners. Said election shall not be later than sixty (60) days after the conveyance by the developer of seventy-five percent (75%) of the units, or three years (3) after the recording of the Declaration, whichever is earlier. To the extent permitted pursuant to law, Developer shall be permitted, by Covenants and Conditions and Restrictions, to maintain control of the Design and Architectural Review Board ("ARB") at Developer's expense after such turn-over to the HOA.

G. The charge to Developer by the Village for review of each final plat of a unit of the subdivision shall be seven hundred dollars ($700.00) per lot, rather than the seven hundred

fifty dollars ($750.00) per lot provided for in the current Village Subdivision Ordinance. Payment to the Village of forty six thousand two hundred dollars ($46,200.00) for the sixty six (66) lots of Norton Lake Unit 1 (Exhibit B) shall be made prior to execution of the Plat by the President of the Village. Payment to the Village for the forty (40) lots of Norton Lake Unit 2 shall be made at the time of execution of said plat.

H. Plantings shall be as per the Landscape Plan prepared by William James Spear & Associates dated May 20, 2010 and are hereby approved by this Ordinance. For purposes of protecting wetlands and basements, the Building Pad areas for the lots near the Wetland (e.g., Lots 48-55) shall be further evaluated by the soils engineer during the mass grading of the site to determine if undercutting of the building pad and placement of compacted clay fill will be necessary due to either poor bearing capacity or wet soils. Exact location, depth, and compaction of the clay shall be determined by the Soils Engineer. The Soils Engineer shall be a Professional Engineer licensed in the State of Illinois. The name of the Soils Engineer selected by Developer shall be presented to the Village Engineer and shall be subject to approval by the then existing Village Engineer, whose determination shall be binding on Developer and the Village, as a condition of obtaining building permit for said lots.

I. Developer shall, at the time of seeking final approval for Unit 2, provide evidence that it has valid IEPA and WSD permits for sanitary sewer service for said 40 lots. Likewise, should any future owner of lot 107 petition for development of that property, then petitioner shall furnish proof of annexation to the WSD, and IEPA permits or shall design the development for well and septic. If, notwithstanding prior approval by the IEPA for sanitary sewer connections for the 106 lots of shown on the Master Plan, the IEPA and/or the WSD, or any regulatory body having jurisdiction, or any court takes action which has the effect of preventing the development of the Subject Property or any part thereof, the Village shall have no liability and Developer releases and holds harmless the Village from any liability, including but not limited to all litigation costs, expense and judgments, which relates, directly or indirectly, to the Village approval of any unit of the Subject Property. A separate indemnification agreement evidencing this release and hold harmless and also providing for indemnification of the Village by Developer for any claim arising out of or resulting from the approval of the Planned Unit Development Ordinance and the acceptance of title by the Village to Parcel 2 of Unit 2 of the Fox Mill Subdivision has been executed by the Developer and the Village prior to the approval of this Ordinance and a copy is attached hereto as Exhibit C.

J. At all times while improvements are being constructed within the subdivision Developer agrees to place and maintain "no construction traffic" signs as recommended by the Campton Township Highway District and to require that all construction traffic enter and exit the subdivision from Illinois Route 64.

K. Developer shall provide an aggregate total of 6 full cut-off street light fixtures substantially similar to the type of fixture depicted in the cut sheet attached hereto as Exhibit D, using a maximum of 20 foot high poles (with reasonable flexibility for changes in supply and technology). These street light fixtures shall be located at the roadway

intersections and no other lighting will be provided by the Developer.

L. The floors of all basements in all residences shall be not less than two feet above the normal water level (786.0 feet) of the detention basin on the property.

M. No building shall be constructed within any area dedicated for any easement ("Easement Area"). Building setbacks shall be those shown on the Final Engineering Norton Lake Subdivision, prepared by Craig R. Knoche & Associates Civil Engineers, dated March 1, 2010 with last revision of November 30, 2010, a copy of which is on file with the Village, but no less than 8 feet for side yard set backs.

N. No change or modification of any ordinance, code or regulation of the Village shall be applied for a period of twenty (20) years from the date of approval of this Ordinance so as to adversely affect the zoning classification of the Subject Property or the uses permitted thereunder by the Zoning Ordinance of the Village in effect as of the date of approval of this Ordinance or hereinafter adopted as hereinbefore provided; and shall not:

(a) result in any reduction of the number of zoning lots allowed under the terms of this Ordinance; and

(b) result in any lot or lots, other than Lots 107 and 108, or structure erected on any lot pursuant to this Ordinance, being classified as "non-conforming."

The foregoing notwithstanding, in the event that the Village is required to modify, amend, or enact any ordinance or regulation, and to apply the same to the Subject Property, pursuant to the express and specific mandate of any superior governmental authority, such ordinance or regulation shall apply to the Subject Property and Developer shall comply with same; provided, however, that any so-called grandfather provision contained in such superior governmental authority mandate which would serve to exempt or delay implementation against the Subject Property, shall be given full force and effect.

Except as modified by the terms and provisions of this Ordinance, Developer shall comply in all respects with the conditions and requirements of all ordinances, rules and regulations of the Village applicable to similar property within the Village as they may exist from time to time including, but not limited to, those requiring the issuance of permits or the payment of fees thereof, except that no permits shall be required or fees payable (other than as provided in this Ordinance or Village Code) unless and until a development permit has been issued as provided for in this Ordinance. Irrespective of whether or not the Village adopts new ordinances, rules or regulations, the Developer shall cooperate with the Village as to exterior lighting fixtures so that they shall be consistent with "Dark Sky" principles. Should the Village subsequently adopt Ordinances setting forth Dark Sky requirements for residential exterior lighting, the Developer agrees to comply with said Ordinances as a condition to securing building permits after the effective date of such Ordinances.

O. The HOA shall provide that all Owners of residential lots (which shall not include Lots 107 and 108 until such time as Lot 107 shall be developed) shall be members of the HOA, and shall, provide for mandatory dues in amounts sufficient to pay for:

(a) maintenance, repair and restoration of all open space areas, Norton Lake, common area retention/detention areas, and stormwater management areas, including Lots 107 and 108; and

(b) maintenance, repair and restoration of property within dedicated rights-of-way other than the paved portions of roadways designed for motor vehicle traffic and other than the storm water piping and curb inlets located within the curb lines of those roadways; and

(c) maintenance, repair, restoration and replacement of storm drainage structures other than those storm drainage structures located within the curb lines of those roadways that the Village shall maintain at its expense.

(d) maintenance, repair, restoration and replacement of all bike paths.

P. The application of effluent, including treated effluent, shall be subject to all terms of the on-site Irrigation Easement as set forth on the Unit I Final Plat of Subdivision and rules and regulations of the IEPA, WSD, and the Village.

Q. No fencing, other than underground fencing for pet control, shall be permitted on, or immediately adjacent to, any open space parcel without approval of the Corporate Authorities on a case-by-case basis; however fencing where required by law for swimming pools (which shall not permit privacy fencing) shall be allowed on residential lots subject to permits issued by the Corporate Authorities provided that the fencing complies with all set-back requirements.

R. Within ninety (90) days from execution of the Final Plat of Unit 1, Developer shall convey Lot 115 to the Village by good and sufficient warranty or trustee's deed, accompanied by a paid title commitment issued by Chicago Title Insurance Company showing the proposed insured as the Village with title subject only to (1) real estate taxes providing that Developer shall be responsible for payment of all taxes accruing to date of conveyence and (2) matters pursuant to those items on the Declaration of Covenants, Restrictions and Easements for Norton Lake Subdivision (attached hereto as Exhibit E) and those annexation agreements of record and those easements of record that specifically apply to said lot 115.

S. The Village owns or shall, soon after adoption of this Ordinance, own Parcel 2 of Unit II of the Fox Mill PUD, said lot being legally described on Exhibit F hereto (and hereafter referred to as "Parcel 2 of Unit 2 Fox Mill Subdivision"). Parcel 2 of Unit 2 Fox Mill Subdivision is depicted on the Master Plan (Exhibit A) and contains a portion of the right-of-way. Notwithstanding the Village's ownership of Parcel 2 of Unit 2 Fox Mill Subdivision, the Developer shall maintain Parcel 2 of Unit 2, Fox Mill Subdivision as open space and shall maintain all portions of the rights-of-way on Parcel 2 of Unit 2, Fox Mill

Subdivision, but excluding paved portions of roadways designed for motor vehicular traffic and storm water piping and curb inlets within the curb line, until the Developer has transferred responsibility for such maintenance to the Norton Lake Home Owners Association, Inc. ("HOA"). After the Developer has transferred responsibility to the HOA, the HOA shall maintain all rights-of-way on Parcel 2 of Unit 2, Fox Mill Subdivision, excluding paved portions of roadways designed for motor vehicle traffic and storm water piping and curb inlets within the curb line, and shall maintain the remainder of Parcel 2 of Unit 2 Fox Mill Subdivision as open space.

T. Developer and St. Charles Community Unit School District Number 303 have reached agreement whereby Developer shall convey Lot 109 to the School District in part fulfillment of Developer's obligation pursuant to the provisions of Chapter 2 of Title 9 of the Village Code as shown on Exhibit B and defined in Exhibit G. Developer shall pay the remaining portion of the required payment pursuant to said Village Code at the time of obtaining each building permit according to the schedule set forth in Exhibit G attached hereto.

U. Developer has filed with the Village final engineering plans described as Final Engineering Norton Lake Subdivision, prepared by Craig R. Knoche & Associates Civil Engineers, dated March 1, 2010, with last revision of November 30, 2010, which are hereby approved and the Development shall be constructed substantially in compliance therewith.

V. Substantially contemporaneously with the approval of this Ordinance, the Village is approving the Final Plat of Unit 1 and upon the recording of said Plat, Developer will record the "Declaration of Covenants, Restrictions and Easements for Norton Lake Subdivision" (the CC&Rs),a copy of which is attached hereto as Exhibit E. In the event of any conflict between the provisions of this Ordinance, the CC&Rs and the restrictions and other matters contained within the said Norton Lake Unit 1 Plat, the provisions of the Norton Lake Unit 1 Plat shall govern. The CC&Rs shall not apply to Lots 107, 108, 109, 111, 112 or 115. The Developer/HOA/Owners are responsible for the enforcement of the CC&Rs. Sections 2.1, 2.2, 4.3, 4.4, 5.1(h), 11.1, 11.3, 11.5 and Article XIV of the CC&Rs shall not be amended without concurrence of the Village of Campton Hills evidenced by the adoption of a Resolution approved by a majority of the Corporate Authorities then holding office.

W. This Ordinance shall inure to the benefit of and be binding upon the successors in title and assigns of the current owner of the Subject Property and Developer, and each of them, and upon the successor Corporate Authorities and successor municipalities of the Village.

X. If any provision or part of this Ordinance is held to be invalid by any court of competent jurisdiction, such provision or part shall be deemed to be excised from this Ordinance, and the invalidity thereof shall not affect any of the other provisions contained herein.

Y. Any notices required or permitted pursuant to this Ordinance shall be either personally delivered or shall be sent by certified mail, return receipt requested, or by facsimile transmission with proof of facsimile receipt, as follows:

If to the Village:

Village of Campton Hills
40W115 Campton Crossing Drive, Unit B
Campton Hills, Illinois 60175
Attention: Patsy Smith, Village President
Facsimile: (630) 584-5775

with a copy to:

J. William Braithwaite
Arnstein & Lehr LLP
2800 West Higgins Road, Suite 425
Hoffman Estates, Illinois 60169
Facsimile: (847) 843-3355

If to the Developer:

Hudson T. Harrison
Manager, Norton Lake Development, LLC
888 Fox Glen Drive
St. Charles, IL 60174
Facsimile: (630)377-3963

with a copy to:

Derke Price
Ancel Glink Diamond Bush DiCianni & Krafthefer PC
140 S. Dearborn Street Suite 600
Chicago, IL 60603
Facsimile: (312) 782-0943

If to the HOA:
Norton Lake Homeowners Association, Inc.
c/o Hudson T. Harrison
Norton Lake Development, LLC
888 Fox Glen Drive
St. Charles, IL 60174
Facsimile: (630) 377-3963

Any such notice shall be deemed received on the third (3rd) day after mailing, or the actual date of receipt, whichever shall be earlier. Any party may designate a different address for service of notice by serving notice of the change in the manner provided in this Section. Service by facsimile transmission shall be deemed personal delivery, so long as a confirmation copy is also sent by regular United States Mail on the same date as the facsimile transmission.

Section 3

This Ordinance shall be in full force and effect upon passage, approval and publication pursuant to law. This Ordinance shall be published in pamphlet form.

Passed this 21st of December, 2010 by roll call vote:

	AYES	NAYS	ABSENT	ABSTAIN
Trustee Laura Andersen	X			
Trustee Susan George		X		
Trustee Jim Kopec	X			
Trustee Albert Lenkaitis, Jr.	X			
Trustee Mike Millette	X			
Trustee John Strauss	X			
President Patsy Smith				

APPROVED THIS 4th DAY OF ~~December 2010~~ January 2011.

Patsy Smith
Patsy Smith, Village President

(SEAL)

ATTEST: Carolyn Higgins
Carolyn Higgins, Village Clerk

Published in pamphlet form on January 4, ~~2010~~ 2011

9382686.2

Accepted and Agreed to by Developer:

The undersigned hereby accepts the provisions of the foregoing Ordinance and agrees to be bound by the provisions thereof.

Dated: 1-10-11

NORTON LAKE DEVELOPMENT, LLC

By: Hudson T. Harrison
Its Manager: Hudson T. Harrison

Accepted and Agreed to:

Dexter F. Norton Jr. Norton Trust No. 101
Caryl Norton Norton Trust 102

By: _____

EXHIBITS

A. Master Plan

B. Final Plat of Subdivision for Norton Lake Unit 1

C. Indemnity Agreement

D. Street Light Cut Sheet

E. Covenants, Restrictions and Easements for Norton Lake Subdivision

F. Legal Description of Parcel 2 of Unit II of the Fox Mill PUD.

G. School Donation Schedule

INDEMNIFICATION AGREEMENT

WHEREAS, in order to facilitate the development of that subdivision known as Norton Lake in the Village of Campton Hills, the Village has agreed to rely upon the determination of the Wasco Sanitary District and the Illinois Environmental Protection Agency concerning the availability of water and sewer services for the subdivision; and

WHEREAS, in order to facilitate the development of that subdivision known as Norton Lake in the Village of Campton Hills, the Village has agreed to accept title to that piece of Real Estate known as "Parcel 2 of Unit 2 of the Fox Mill Subdivision"; and

WHEREAS, to induce the Village to accept Title to said Parcel 2 of Unit 2 of Fox Mill Subdivision and to approve the development, the Developer, Norton Lake Development, LLC ("Developer"), by its manager, Hudson T. Harrison, has covenanted and agreed to release and holds harmless the Village from any liability, including but not limited to all litigation costs, expense and judgments, that arise from or relate, directly or indirectly, to the Village approval of said Norton Lake Development and any unit of the Subject Property as defined in the Ordinance approving the Planned Unit Development for the subdivision; and

WHEREAS, to induce the Village to accept title to that parcel of Real Estate known as "Parcel 2 of Unit 2 of the Fox Mill Subdivision", and upon approval of the development and execution of the PUD Ordinance by the Developer, Norton Lake Development, LLC ("Developer"), the Developer has covenanted and agreed to defend and indemnify the Village against any claims related to or arising out Village's acceptance of of title to said Parcel 2.

NOW THEREFORE the Developer hereby further covenants and agrees as follows:

To the fullest extent permitted by law, Developer shall waive any and all rights of contribution against the Village and shall indemnify and hold harmless the Village and its officers, officials, employees, volunteers and agents from and against all claims, damages, losses and expenses, including, but not limited to, legal fees (including reasonable attorney's and paralegal's fees, expert fees and court costs) arising out of or resulting from: A) the approval of the Planned Unit Development Ordinance; B) the Illinois Environmental Protection Agency and/or the Wasco Sanitary District, or any regulatory body having jurisdiction, or any court, taking action which has the effect of preventing the development of the Subject Property; or C) the acceptance of title by the Village to Parcel 2 of Unit 2 of the Fox Mill Subdivision. The Village agrees to cooperate with the Developer in the defense of any such claim and to act in good faith with respect to any settlement proposals.

AGREED: Hudson T. Harrison

Hudson T. Harrison, Manager
Norton Lake Development, LLC
Developer of the Norton Lake Subdivision

9351844.1

EXHIBIT C

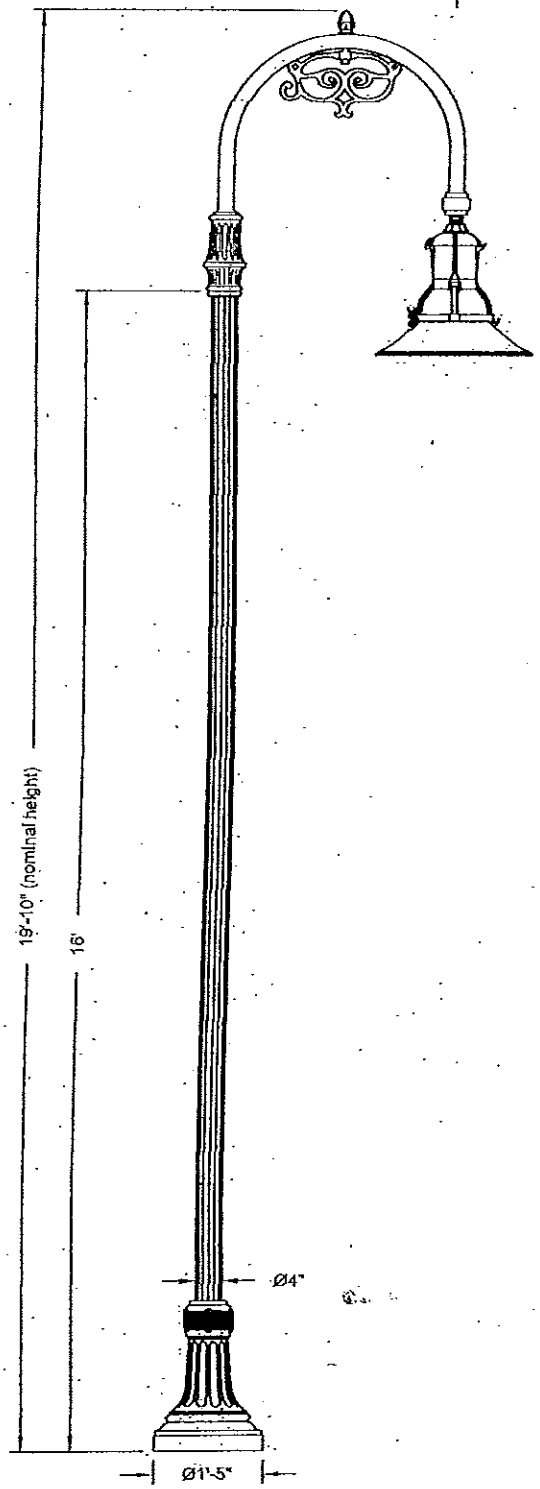

Specifications

POST DESCRIPTION
The lighting post shall be all aluminum construction, with a classic tapered and fluted base, and a 4"Ø fluted shaft with a tenon for luminaire mounting.

MATERIALS
The base shall be heavy-wall cast aluminum (356. 1Ingot alloy) formed true to pattern with complete detail.The shaft material shall be fluted aluminum extrusion(6061-T6). All hardware shall be tamper resistant,stainless steel. Anchor bolts shall be hot-dip galvanized steel.

DIMENSIONS
The post height shall be 16'-0", with a 17"Ø base. The fluted shaft shall be 4"Ø with a 3" O.D. tenon for arm mounting.

INSTALLATION
Post provided with (4) 3/4"Ø L-type, anchor bolts to be installed on a 10"Ø to 12"Ø bolt circle. A door shall be located in the base for anchorage and wiring access. A grounding screw shall be provided inside the base, opposite the door, for easy access.

FINISH
The post assembly shall be shipped with a 'black' powder coat finish.

LUMINAIRE DESCRIPTION
- Memphis Pedestrian
- 100W High Pressure Sodium (HPS)
- Multitap 120-277V, Factory Wired For 120V Only
- Symmetric Sag Glass Door, Deep Skirt

For complete specifications see us1592.

Anchorage Detail

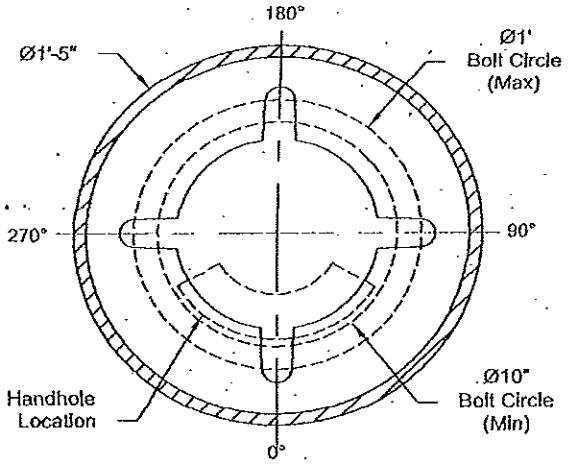

Catalog #'s:
ZNY16F417CABKH - MGC36/1CABKH - MSP10DMHMTB6 DS.V-27266

HOLOPHANE®
LEADER IN LIGHTING SOLUTIONS
An AcuityBrandsCompany

Campton Hills
Campton Hills, IL

ORDER #: Q933-640-01	TYPE:	DRAWING #: TSG 005986
REVISION:	REVISION DATE:	
DRAWN: KRW	ORIGIN DATE: 11/18/10	PAGE: 2 of 2

ONLY AFTER APPROVAL BY THE

EXHIBIT D

Prepared by and Return to:

Hudson T. Harrison
888 Fox Glen Drive
St. Charles, IL 60174

EXHIBIT E

12/21/2010

DECLARATION OF COVENANTS, RESTRICTIONS AND EASEMENTS FOR NORTON LAKE SUBDIVISION VILLAGE OF CAMPTON HILLS, KANE COUNTY, ILLINOIS

DECLARATION OF COVENANTS, RESTRICTIONS AND EASEMENTS For Norton Lake Subdivision ("Norton Lake"), is made this _____ day of _____, 2010, by NORTON LAKE DEVELOPMENT, LLC, as successor to HUDSON T. HARRISON, hereinafter referred to as "Owner," also referred to hereafter as "Developer".

WHEREAS, Developer and/or the other parties signing this instrument are the owners of the real property more particularly described on Exhibit A, attached hereto and made a part hereof (hereinafter referred to as the "Land"); and

WHEREAS, Developer intends to develop or has developed or has caused to be developed on portions of said Land a planned residential community ("PUD") known as "NORTON LAKE" all in accordance with applicable zoning ordinances; and

WHEREAS, Developer has submitted a Master Plan, in plat form, for the entire development, but is platting and developing Norton Lake in two units, known as Norton Lake Unit 1 and Norton Lake Unit 2 and hereafter referred to as "Unit 1" and "Unit 2" respectively; and

WHEREAS, Developer desires to provide for preservation of the values and amenities of the Land and to subject the Land to the land use covenants, restrictions, easements, reservations, regulations, burdens and liens hereinafter set forth; and

WHEREAS, Developer has deemed it desirable for the efficient preservation of the values and amenities established as aforesaid to create a corporation known as NORTON LAKE HOMEOWNERS ASSOCATION, INC., hereafter referred to as the Association, to which there has been and will be delegated and assigned certain powers and duties of ownership, operation, administration, maintenance and repair of the Land and improvements, the enforcement of the covenants, restrictions, easements, reservations, regulations, burdens and liens contained herein and the collection and disbursement of the assessments and charges as hereinafter are particularly set forth; and

WHEREAS, Developer has agreed to the creation of a back-up SSA #4 by the Village of Campton Hills to provide, under specified circumstances, a means by which the Village of Campton Hills may levy taxes against all lots that are the subject of these Covenants, Restrictions and Easements, except Lot 115, to secure performance with the Planned Unit Development Ordinance approved by the Village as Ordinance No. 10-31 on December 21, 2010; the Village's other Ordinances, as applicable; and the terms of these Covenants, Restrictions and Easements; and

WHEREAS, the parties signing this instrument desire to join in and consent to this Declaration to acknowledge their consent and joinder in the same; and

WHEREAS, these Covenants and Restrictions shall be recorded initially with the Plat of Subdivision for Unit 1 and, at such time as Unit 2 shall receive final plat approval, likewise be recorded with the Plat of Subdivision for Unit 2.

NOW THEREFORE, in consideration of the promises and mutual covenants herein contained, Developer and the other parties signing this instrument hereby declare that the Land, with the exception of Lots 107 and 108 until such time as they shall be developed, shall be owned, held, used, transferred, sold, conveyed, demised and occupied subject to the covenants, restrictions, easements, reservations, regulations, burdens and liens hereinafter set forth.

ARTICLE I

DEFINITIONS

The following words and phrases when used in the Declaration shall have the following meanings:

1.1 ARB means the Architectural Review Board.

1.2 ARTICLES means the Articles of Incorporation of the Norton Lake Homeowners Association, Inc.

1.3 ASSOCIATION means the Not for Profit Corporation known as Norton Lake Homeowners Association, Inc.

1.4 ASSOCIATION EXPENSES means the expenses for which the Owners are or may be liable to the Association in accordance with the method of allocation thereof described in Article V hereof and includes the following:

A. Open Space Expenses: which mean and include those expenses incurred or to be incurred by the Association with regard to ownership, operation, administration, maintenance and repair of the Open Space or any part thereof; and

B. Expenses which means and includes those expenses incurred or to be incurred by the Association with regard to the operation, administration, maintenance and repair of the lots and buildings as set forth in the provisions of this Declaration.

1.5 BOARD OF DIRECTORS means the Board of Directors of the Association.

1.6 BYLAWS means the Bylaws of the Association.

1.7 DECLARATION means this instrument and any amendments, supplements or modifications hereto.

1.8 DOCUMENTS means in the aggregate this Declaration and any and all Supplemental Declarations, the Articles, the Bylaws, the Rules and Regulations of the Association and all of the instruments and documents referred to or incorporated therein or attached thereto as the same may be amended from time to time.

1.9 COUNTY means Kane County, Illinois.

DEVELOPER means NORTON LAKE DEVELOPMENT, LLC, its successors and assigns; provided however, that an Owner shall not, solely by the purchase of a lot, be deemed a successor or assign of Developer or of the rights of the Developer under this Declaration unless such Owner is specifically so designated as a successor or assignee of such rights in the respective instrument of conveyance or any other instrument executed by the Developer. The Developer shall have the right to designate any other party or entity as a successor Developer, and if such a designation occurs, the designated party or entity shall succeed to all of the Developer's rights and powers as set forth in the documents.

1.10 INSTITUTIONAL MORTGAGEE means any lending institution or real estate investment trust having a first mortgage lien upon a Lot and includes any insurance company doing business in Illinois and approved by the Commissioner of Insurance of the State of Illinois, a Federal or State Savings and Loan Association, Building and Loan Association or bank doing business in the State of Illinois and approved by the office of the Comptroller, Division of Banking of the State of Illinois, a mortgage banking company licensed in the State of Illinois and "Secondary Mortgage Market Institution" which includes the Federal National Mortgage Association, Federal Home Loan Mortgage Corporation and such other secondary mortgage market institutions as the Board of Directors shall hereafter approve in writing; and any mortgage which has loaned money to Developer secured by a mortgage encumbering any portion of the Land.

1.11 LAND means the land more particularly described as NORTON LAKE Unit 1, attached hereto as Exhibit A, which is committed by this Declaration to the provisions hereof and, at such time as it is platted and developed, Unit 2, and any additional real estate which may hereafter be declared to be subject to this Declaration and all improvements made to such land including residences.

1.12 LOT means a portion of the Land upon which is or will be located a home, the legal description of which is set forth in the deed of conveyance of the said Lot and as platted on the approved final plats of subdivision.

1.13 NORTON LAKE means the master planned residential community to be developed in two units, Unit 1 and Unit 2, upon the real property described in Exhibit A to this Declaration. It includes all improvements now or hereafter located thereon and includes the Land and all improvements on any Land submitted to the provisions of this

Declaration with Unit 1 and, subsequently, with Unit 2 and any lands added hereafter pursuant to the right to add additional lands.

1.14 OPEN SPACE means Lots 110, 111, 113, 114, 115 (until the Village has improved Lot 115 or until 10 years from the date of deed, whichever comes first), and 116 through 119, all as set forth on the Master Plan and dedicated to the Association through the respective Plats of Subdivision for Units 1 and 2; as well as Parcel 2, Fox Mill, Unit II, owned by the Village of Campton Hills. Open Space also includes the dedicated road right-of-way--other than that portion of road between the back of curb to the opposite back of curb--and the bike paths, as well as any street lighting within or adjacent to the aforesaid road right-of-way.. The Association will maintain all such Open Space pursuant to the terms hereof and consistent with the Landscape Plan prepared by Speer dated May 20, 2010.

1.15 OWNER means the owner or owners of the fee title to a Lot located within the property identified as the Land.

1.16 SINGLE FAMILY OCCUPANCY. Single Family Occupancy shall mean and refer to occupancy by a family unit as defined by Village Code.

1.18 SSA means the back-up Special Service Area #4 established the Village of Campton Hills.

1.19 SUPPLEMENTAL DECLARATION means a Supplemental Declaration of Covenants, Conditions, and Restrictions recorded amongst the Public Records of County by Developer submitting all or a portion of additional land to the terms and provisions of this Declaration. A Supplemental Declaration substantially similar to these terms is anticipated for Unit 2 and possibly for Lots 107 and 108 on the Master Plan, should those lots develop.

1.20 VILLAGE means Village of Campton Hills, Illinois.

ARTICLE II

COVENANTS AND RESTRICTIONS: CONVEYANCE TO ASSOCIATION OF OPEN SPACES

Developer does hereby declare that the Land shall be used, transferred, demised, sold, conveyed and occupied subject to and in accordance with the following:

2.1 LAND USE COVENANTS

Land. The Land, except as permitted herein on Lots 107 and 108, shall be for residential use only; no commercial or business occupations may occur on the Land except for Home Occupations, as defined herein, and also except for the construction, development, sale and rental of the Land or portions thereof by Developer and used by Developer as offices. For purposes of this Declaration, "Home Occupation" shall mean a

gainful occupation, profession, business or commercial activity engaged in by one or more occupants of a dwelling as an accessory use, incidental and secondary to the principal use of the dwelling, that shall meet the following requirements: the use shall be operated entirely within the dwelling, except for swimming lessons in an enclosed yard and swimming pool, and only by the occupant of the dwelling; the use shall not permit the conduct of retail business, other than by mail or off-site distribution; the use shall not permit any manufacturing business or repair shop of any kind; the use shall not be operated in any accessory building; the use shall not include more than one outside employee; the use shall not include the arrival and/or departure of more than one outside employee from the residence and/or property; the use shall not permit any commercial vehicles in excess of 3/4 ton inside or outside of any buildings on the property; the use shall not permit more than one (1) commercial vehicle 3/4 ton or less; the use shall not permit the parking of more than three (3) cars simultaneously on the property or on any nearby road right-of-way and only between the hours of 9:00a.m. and 5:00p.m., for customers or clients; the use shall not permit delivery by other than private passenger vehicles, parcel service, or letter carrier for commercial purposes; the use shall not permit teaching, musical instruction, swimming instruction, dancing and/or other instruction and counseling of more than three persons at a time; the use shall not permit any exterior display, signage, storage or evidence of the home occupation, the use shall not allow the operation of a barber shop or beauty parlor with more than one (1) chair. Any Home Occupation use that creates objectionable noise, fumes, odor, dust, vibrations, or electrical interference outside the structure, or more than normal residential traffic, or a nuisance to neighboring property, shall be prohibited.

A. Open Space. The portions of the Land not included within the Lots nor dedicated to a party other than the Association shall be used and conveyed solely in accordance with this Declaration. The Open Space as designated in Unit 1, and subsequent to being platted and developed, Unit 2, shall be grassed or planted and kept grassed or planted as green open space, or planted with such other form of ground cover or landscaping as developer or the ARB considers consistent with the plan for development for the beautification of NORTON LAKE and consistent with the Landscape Plan prepared by Speer dated May 20, 2010. Furthermore, the use of the open space is for the education, pleasure and recreation of the public.

B. Disconnection. For a period of 20 years from the date of passage of Ordinance No. ___ by the Village of Campton Hills, no portion of the Land may be disconnected from the Village of Campton Hills.

2.2 RESTRICTIONS ON OCCUPANCY AND USE OF THE LAND

In consideration of the benefits hereinafter contained and the payment of the Association Expenses referred to herein, Developer does hereby declare that the Land, including but not limited to the Lots and homes shall at all times be used, constructed, occupied and held subject to the provisions of the following:

All structures shall be constructed in accordance with applicable government building codes, and with more restrictive standards, which may be required by the ARB. Traditional residential designs are required.

Unless approved as a variance by the ARB, no home shall be constructed that has less than 3,000 square feet of living area for a two story home with not less than 1,700 on the first floor, or 2,400 square feet of living area for a ranch home. The term "living area" shall not include garage, porch or area below grade. Raised ranches, tri-level and bi-level homes shall not be permitted. End loaded garages shall be strongly encouraged.

Aluminum or vinyl siding will not be permitted. Chimneys must be masonry.

The ARB shall have the right to allow square footages and exterior materials that vary from the above parameters on a case-by-case basis, where, in the ARB's sole discretion, such variance is appropriate and promotes the purposes of this Declaration.

Unless otherwise amended by the ARB, the front yard setback of all homes shall be no less than 35 feet except 30 feet for the end loaded garages on corner lots, and shall be set back no more than 50 feet from the lot line.

Rear yard setbacks must be a minimum of 35 feet from the rear lot line. If there is a landscape easement along the rear yard, an additional 20 feet rear setback will be required.

Side yard setbacks must be a minimum of eight feet unless otherwise increased on the Final Plat of Subdivision to accommodate special side yard easements.

The ARB shall have the right to establish the setbacks without the above restrictions provided they are no less than that required by the Village.

A. Plans and Specifications and Architectural Review Board. For the purpose of insuring the development of NORTON LAKE as an area of high standards, an architectural review board ("ARB") shall be established as follows;

1. The ARB. Initially, the Architectural Review Board shall consist of at least three (3) persons designated by Developer, and Developer shall also retain the power to replace such designees. At such time as Developer no longer owns any property within NORTON LAKE or when Developer voluntarily so elects, Developer shall assign to the Association Developer's rights, powers, duties and obligations as to the ARB, whereupon the Board of Directors of the Association shall appoint the members of the ARB. In the event of the death or resignation of any member of the ARB, the Developer or its assignee shall have the full

authority to designate a successor. Review by the ARB shall be without expense to any applicant.

2. ARB Action. A majority of the ARB may designate a member of the ARB to act for it. Approval or disapproval by a majority of the members of the ARB (or by the member designated by the majority of the members) shall constitute the official approval or disapproval of the ARB. Any approval or disapproval of the ARB shall be subject to review by the Board of Directors ("Appeal"). An Appeal may be made by either the Owner who submitted the initial request for the approval to the ARB, the Developer or the Association. The request for an Appeal shall be submitted in writing to the Board of Directors within ten (10) days after issuance by the ARB of its decision; provided however, such time period may be extended in the sole discretion of the Board of Directors. Unless extended as herein provided, any decision of the ARB shall be final ten (10) days after issuance. Where a decision on the ARB is Appealed, the decision of the Board of Directors shall be the final decision on the matter. Any written request for Appeal shall be accompanied by copies of all material submitted to the ARB and by the written determination of the ARB in reference to the matter. A request for Appeal shall also state the basis on which the person submitting the request for Appeal believes the decision of the ARB should be changed.

3. Requirement of ARB Approval. No improvement or structure of any kind, including, without limitation, any building, wall, fence, swimming pool, tennis court, or screened enclosure, shall be erected, placed or maintained, and no addition, alteration, modification or change to any such improvement or structure shall be made, without the prior written approval of the ARB.

4. Method of Obtaining ARB Approval. In order to obtain the approval of the ARB, a complete set of plans and specifications for proposed construction and any and all other reasonable requested information and materials related thereto ("Plans") shall be submitted to the ARB for its review. The Plans shall include, as appropriate, the proposed location, grade, elevations, shape, dimensions, exterior color plans, exterior lighting, landscaping plans, approximate cost, the nature, type and color of materials to be used. The ARB may also require the submission of additional information and materials as may be reasonably necessary for the ARB to evaluate the proposed construction or alteration. The ARB shall evaluate all Plans utilizing standards of the highest level as to the aesthetic quality and materials and workmanship to be used and as to suitability and harmony of location, structure and external design in relation to surrounding topography and structure.

5. Approval or Disapproval by the ARB. The ARB shall have the right to refuse to approve any Plans which, in it sole discretion, are not suitable or desirable. Any and all approvals or disapprovals of the ARB shall be in writing and shall be sent to the respective Owner. In the event ARB fails to approve or to disapprove in writing any proposed Plans within forty-five (45) days after their submission to the ARB, then said Plans shall be deemed to have been approved by the ARB and the appropriate written approval delivered forthwith.

6. Indemnification. Each and every member of the ARB specifically including but not limited to Developer's designated members, shall be indemnified by the Association and the Owners against all costs, expenses and liabilities, including counsel fees at all trial and appellate levels, reasonably incurred by or imposed upon him or her in connection with any proceeding, litigation or settlement in which he or she becomes involved by reason of being or having been a member of the ARB. The foregoing provisions for indemnification shall apply whether or not he or she is a member of the ARB at the time such expenses are incurred. Notwithstanding the above, in instances where a member of the ARB admits or is adjudged guilty of willful misfeasance or malfeasance the performance of his or her duties, the indemnification provisions of the Declaration shall not apply; otherwise the foregoing rights to indemnification shall be in addition to and not exclusive of any and all rights of indemnification to which a member of the ARB may be entitled whether by statute or common law.

7. Enforcement. There is specifically reserved unto the ARB the right of entry and inspection upon any Lot or other portion of the Land for the purpose of determination by the ARB whether there exists any construction of any improvement which violates the terms of any approval by the ARB or the terms of this Declaration or of any other covenants, conditions and restrictions to which its deed or other instrument of conveyance make reference. The Board of Directors is specifically empowered to enforce the provisions of the Declaration by a legal or equitable remedy, and in the event it becomes necessary to resort to litigation to determine the propriety of any constructed improvement, or to remove any unapproved improvements, the Association shall be entitled to recover all court costs, expenses and reasonable attorneys' fees in connection therewith. The Association shall indemnify and hold harmless the Board of Directors from all costs, expenses and liabilities, including Attorneys' fees incurred by virtue of any member of the Board of Director's service as a member of the Board of Directors.

8. Development Standards. The ARB is empowered to publish or modify from time to time, design and development standards ("Standards") for NORTON LAKE, including but not limited to standards for the following: i) Architectural design of improvements; ii) fences, walls and similar structures, iii) exterior building materials and colors; iv) exterior landscaping; v) exterior appurtenances relating to utility installation; vi) signs and graphics, mailboxes and exterior lighting; vii) building set backs, pools and pool decks, side yards and related height bulk and design criteria; and viii) all buildings, landscaping and improvements on land owned or controlled by the association. The Standards shall be reasonable and in conformance with the approved PUD. A copy of any Standards promulgated and any modification or amendment there of shall be available to owners and mortgages.

9. Scope of Review. The ARB shall review and approve or disapprove all plans submitted to it for any proposed improvement, alteration or addition, solely on the basis of the aesthetic consideration and overall benefit or detriment which would result to the immediate vicinity and to NORTON LAKE and the Land as a whole. The ARB shall take into consideration the aesthetic aspects of the architectural design, placement of buildings, landscaping, color schemes, exterior finishes and materials and similar features, and shall not be responsible for reviewing, nor shall its approval of any plans or design be deemed approval of, any design or plan from the standpoint of structural safety or conformance with building or other codes.

10. Variance from Standards. The ARB may authorize, in a reasonable manner so as not to destroy the general scheme or plans of the development of NORTON LAKE, variances from compliance with the Standards, as the same may be modified or amended by the ARB from time to time, when circumstances such as topography, natural obstructions, hardship, aesthetics or environmental considerations may require. If any such variances are granted by the ARB no violation of the restrictions contained in this Declaration shall be deemed to have occurred with respect to the matter for which the variance was granted. The granting of such a variance shall not operate to waive any of the terms and provisions of the Declaration for any purpose except as to that particular property and particular provision hereof of standards promulgated hereby which are covered by the variance. Such variance shall be evidence in writing and executed by a member of the ARB.

11. Non-Liability for Approval Of Plans. Plans and specifications approved by the Architectural Review Board shall not constitute approval for engineering design, or for compliance with zoning and building ordinances. By approving such plans and specifications, the ARB, the members thereof, the Declarant, or the Developer, nor any professional consultant engaged by any of the aforementioned parties, assumes any liability or responsibility therefore, or for any defect in any structure constructed form such plans and specification. The ARB or its successors, or assigns or any member thereof, nor the Developer shall be liable to any owner or other person for any damage, loss or prejudice suffered or claimed on account of (a) the approval or disapproval of any plans, location, grading plans, drawings and specifications, whether or not defective, (b) the construction or performance of any work, whether or not pursuant to approved plans, drawings and specifications, or (c) the execution and filing of an estoppel certificate pursuant to the Design Guidelines, whether or not the facts therein are correct, provided, however, that such action, with the actual knowledge possessed by such party, was taken in good faith. Approval of plans and specifications by the ARB is not, and shall not be deemed to be the representation or warranty that said plans or specifications comply with applicable governmental ordinances or regulations, including but not limited to zoning ordinances and building codes.

B. Other Provisions As to Use of the Land. The following occupancy and use restrictions shall apply to each Owner and his lessees and family members, guests and invitees:

1. Residential Use. The Lots are restricted to residential use with each individual unit to be restricted to residence by a single family, their household, servants and guests. In-ground swimming pools may be constructed in accordance with the terms hereof. A construction shed or trailer may, at the sole discretion of Developer, be placed on a Lot and remain there temporarily during the course of active construction of a home. No other temporary buildings, including, but not limited to tents, trailers, tanks and shacks, may be placed on a Lot without the written consent of the Association and, where applicable, permitted by the Village.

2. No Trade, Business, Profession, Etc. Except for Home Occupations as set forth above, and except for lots 107 and 108 as set forth herein, no trade, business, profession, or other type of commercial activity shall be carried on upon the Land. Notwithstanding the foregoing, Developer shall have the right to carry on construction activity and to transact on the Land any business necessary to consummate the sale, lease or encumbrance of Lots, the homes or other real property in the developments

within NORTON LAKE including but not limited to the right to allow or maintain models and sales offices and have signs and employees in the offices. Developer may, from time to time, assign this commercial usage right (including the right to carry on construction activity) to such other persons or entities as Developer may choose while at the same time retaining such right for itself. The prohibition against commercial activity shall not prohibit the creation, within NORTON LAKE and at the sole discretion of the Developer, of a temporary storage facility for "Prohibited Vehicles" as defined in Section 11 hereof. Notwithstanding anything to the contrary herein contained, the provisions of this Paragraph may not be amended without Developer's prior written consent for so long as Developer owns at least one (1) Lot within NORTON LAKE.

3. No Fences. Other than those required by state and local government (e.g., for swimming pools), no fences of any type shall be permitted upon the land. Any such required fencing must be approved by the ARB pursuant to Article II herein and shall comply with all applicable Village Ordinances.

4. Nuisance. No Owner shall cause or permit to come from his abode any unreasonable noises or obnoxious odors or commit or permit to be carried on in his home or elsewhere on the Land any nuisance or any immoral or illegal activities.

5. Litter and Garbage Collection. No Owner shall sweep or throw from his home any dirt of other materials or litter in any way on the Land. No garbage, trash, refuse or rubbish shall be deposited, dumped or kept on any part of the Land except in closed containers that shall be stored out of sight from the adjoining roadway except for that period of noon the day before scheduled pick-up through 9 pm of the day of the pick-up.

6. Removal of Sod and Shrubbery; Alteration of Drainage, Etc. Except for Lot 115 and Developer's acts and activities in NORTON LAKE, no sod, topsoil, muck, trees or shrubbery shall be removed from the Land and no change may be made in the condition of the soil or the level of any Land except as may be permitted by the ARB in compliance with the Village and County Stormwater Ordinances.

7. Water Supply. No individual water supply system for drinking purposes or household use shall be permitted on any Lot. This provision, however, shall not preclude the installation of any water supply system for irrigation or sprinkler purposes; provided, however, that such system is located, utilized, constructed and equipped in accordance with the requirements, standards and

recommendations of the Association, the Village and the Wasco Sanitary District. Rain barrels, cisterns, and the like to conserve ground water shall be permitted.

8. Sewage Disposal. No individual sewage disposal system shall be permitted on any Lot.

9. Sidewalks. Each Owner shall be responsible for keeping the sidewalk and bike paths abutting his Lot, if any, free from any obstruction or clutter (e.g., grass clippings, garbage and snow).

10. Lighting. No lighting shall be permitted which alters the residential character of NORTON LAKE; provided, however, nothing herein contained shall be deemed to prohibit the maintenance of the lighting installed by Developer upon the roadways within NORTON LAKE (said Lighting Standards depicted in Exhibit B attached hereto) for the purposes of lighting the roadways, sidewalks and pathways of NORTON LAKE. No lighting of outdoor activity areas upon a Lot shall be permitted unless approved by the Association. Exterior lighting shall be consistent with any "Dark Sky" principles and standards that have been adopted by the Village as of the time of installation.

11. Vehicular Parking.

a. Except as provided in the next sub-paragraph hereof, no person, firm or corporation shall park or cause to be parked on the Land, including but not limited to their Lot or in the streets, alleys or parkways abutting their Lot, any recreational vehicle, house trailer, boat, boat trailer or truck (including either tractor or trailer or both) which truck has a carrying capacity of over ¾ ton ("Prohibited Vehicles"), for a period exceeding 24 hours.

b. Any recreational vehicle, boat, boat trailer, or trucks shall be kept in a closed garage.

c. No maintenance or repair shall be done upon or to any vehicle (including, but not limited to, four wheel passenger automobiles) except within a closed garage and totally isolated from public view.

d. Nothing herein shall prohibit the establishment by Developer (or, after the Conveyance Date, by the Association) of any area within NORTON LAKE designated and available for the storage of prohibited vehicles if the establishment of such storage facility is otherwise permitted by applicable government regulation and approved by the Association and the ARB.

12. Radio Transmission Equipment. No ham radios or radio transmission equipment shall be operated upon or permitted to be operated upon the Land without prior written consent of the Association.

13. Antennae and Aerials and Wind Turbines. Except as may be permitted by law or otherwise permitted by the Association or by Developer, no wind turbines, antennae or any other aerials shall be placed upon the Land, or upon any homes or other structures. No satellite dishes larger than 30 inches.

14. Casualty Destruction to Improvements. In the event a residence is damaged or destroyed by casualty, hazard or other loss, then, within a reasonable period of time after such incident, the Owner thereof shall either commence to rebuild or repair the damaged home or improvement upon obtaining Association approval if required hereunder and shall diligently continue such rebuilding or repairing activities to completion or (upon a determination by the Owner thereof that the improvements will not be repaired or replaced) promptly clear damaged improvements and landscape the Lot in a sightly manner. Notwithstanding the foregoing, in the event the Owner rebuilds or repairs his damaged home or improvements without substantial alteration from what was existing prior to the damage or destruction, then the Association's approval shall not be required.

15. Increase in Insurance Rates. No Owner may take any action which will result in an increase in the rate of any insurance policy or policies covering any portion of NORTON LAKE.

16. Reconstruction. Any repair, rebuilding or reconstruction of damaged home shall be substantially in accordance with the architectural plans and specifications for: (i) the originally constructed home (ii) a previously reconstructed home, or (iii) new plans and specifications approved by the Association.

17. Owner Liability. An Owner shall be liable for the expense of any maintenance, repair or replacement of any real or personal property in NORTON LAKE rendered necessary by his act, neglect or carelessness, or by that of any member of his family, or his or their guests, employees, invitees, agents or lessees, but only to the extent that such expense is not met by proceeds of insurance which may be carried by the Association. Such liability shall include any increase in fire insurance rates occasioned by use, misuse, occupancy or abandonment of a home or the Open Spaces. An Owner shall also be liable for any personal injuries caused by his negligent acts or those of any members of his family, or his or

their guests, employees, invitees, agents or lessees. Nothing herein contained, however, shall be construed so as to modify any waiver by insurance companies or rights of subrogation.

18. Rules and Regulations. Each Owner shall be subject to such rules and regulations with respect to NORTON LAKE as the Association determines from time to time to be in the best interest of the Association and the Owners provided that no rules and regulations promulgated by the Association shall conflict with the provisions of the Declaration.

19. Garages. Because of the importance of keeping vehicles within garage areas, no owner may convert any garage area for any other use. This restriction shall not apply to original construction by the Developer, nor shall it prevent the Developer from using a garage as a sales office.

20. Pets and Laundry. Domesticated dogs and cats, ornamental fish, domesticated birds, and reptiles that are kept within tanks shall be permitted as pets. No other animals shall be permitted upon the Land. No outdoor clotheslines or hanging of laundry shall be permitted.

2.3 NON-SEVERABLE INTEREST OF OWNERS. The ownership of a Lot, the residence constructed thereon, all easement rights appurtenant thereto as provided for in the Declaration or any Supplemental Section Declaration including, but not limited to, utility and governmental services easements for encroachments, membership in the Association; and all other appurtenances thereto under the Documents (hereinafter collectively referred to as the "Interest"); shall not be severable, and an Owner shall not and may not sell, convey, demise, lease, assign, pledge or otherwise transfer or encumber any of his right, title or interest in and to his respective Interests or any of such Interest unless such sale, conveyance, demise, lease, assignment, pledge or other form of transfer or encumbrance includes all of his right, title and interest in and to the Interests including, but not limited to, the home and the Lot upon which it is constructed.

2.4 RIGHTS OF DEVELOPER. Notwithstanding any provisions in the Declaration as to use or otherwise to the contrary, Developer reserves the right to carry on construction, development and sales activities; place equipment, machinery, supplies and signs; construct and maintain models or other structures; and park vehicles of prospective or actual purchasers, lessees or employees and personnel of Developer on any part of the Land owned by Developer or the Association, other than the improved bike paths; and to exercise the easement rights and all other rights granted Developer under the Documents.

2.5 DISPUTES AS TO USE. In the event there is any dispute as to whether the use of the Land or any portion or portions thereof complies with the covenants, restrictions, easements or other provisions contained in this Declaration, such dispute shall be referred to the Board of Directors, and a determination rendered by the Board of

Directors with respect to such dispute shall be final and binding on all parties concerned therewith.

2.6 CONVEYANCE TO ASSOCIATION. Developer agrees that it shall convey to the Association fee simple title in and to the nine (9) Open Spaces together with the improvements located thereon on or before the "Conveyance Date" which shall be on or before ninety (90) days after the earlier of the following ("Turnover Event"):

A. The conveyance by Developer of a total of seventy-five percent (75%) of the Lots within NORTON LAKE or any unit or phase; or

B. Three (3) years after the conveyance of the first (1st) home in such phase or unit; or

C. All conveyances to the Association described herein shall be by Warranty Deed subject to (1) taxes for the year of conveyance and subsequent years; (2) such facts as an accurate survey would show; (3) the terms and provisions of this Document and the Master Declaration; (4) easements, restrictions, reservations, conditions and limitations of record; (5) applicable zoning ordinances and regulations. The Association shall be obligated to accept all conveyances of any property within the Land from the Developer.

D. Developer shall be permitted to maintain the ARB until the last home is approved, or turn over the ARB to the Association when the Developer, in its sole discretion, may elect.

2.7 CONVEYANCE FROM DEVELOPER/ASSOCIATION TO THE VILLAGE OF CAMPTON HILLS. Following completion of final grading of Lot 115, the DEVELOPER or ASSOCIATION shall convey to the Village fee simple title in and to Lot Number 115, together with the improvements located thereon.

A. The conveyance to the Village described herein shall be by Warranty Deed subject to (1) taxes for the year of conveyance and subsequent years; (2) easements, restrictions, reservations, conditions and limitations of record; (3) applicable zoning ordinances and regulations.

B. The DEVELOPER/ASSOCIATION shall maintain and be responsible for liability insurance for Lot 115 until the earlier of: (a) the time when the Village improves said Lot with any improvements (including playground equipment) or (b) ten (10) years from date of the Deed conveying ownership to the Village. The installation of benches by the Village approximate to the bike path shall not constitute an "improvement" for purposes of triggering the maintenance of Lot 115 by the Village. Moreover, the Developer/HOA shall continue to maintain the bike path on Lot

115 after the Village assumes all other maintenance responsibility for Lot 115.

C. The Village shall not be subject to Association dues and rules, shall not be a member of the Association, and shall not need to obtain or otherwise be subject to ARB approval for any improvements it may construct on Lot 115.

ARTICLE III

MEMBERSHIP AND VOTING RIGHTS IN THE ASSOCIATION: BOARD OF DIRECTORS

3.1 MEMBERSHIP AND VOTING RIGHTS. Membership in the Association shall be established and terminated as set forth in the Articles and/or Bylaws. Each Owner shall be entitled to the benefit of and is subject to, the provisions of the Documents as same may be amended from time to time. The voting rights of the Members shall be as set forth in the Articles and/or Bylaws.

3.2 BOARD OF DIRECTORS. The Association shall be governed by the Board of Directors which shall be appointed, designated or elected, as the case may be, as set forth in the Articles and/or Bylaws.

3.3 INITIATION OF LEGAL ACTION. Notwithstanding anything contained herein to the contrary, and applying the provisions of Article III, 3.1 (A) the Association shall be required to obtain the approval of the Owners of a majority of all Lots within the Land (at a duly called meeting of the Association at which a quorum is present) prior to the payment of legal or other fees to persons or entities engaged by the Association for the purposes of suing, or making, preparing or investigating any lawsuit, or commencing any lawsuit other than for the following purposes:

A. The collection of assessments and "Maintenance Fees"; or

B. The collection of other charges which Owners are obligated to pay pursuant to the applicable Documents; or

C. The enforcement of the use and occupancy restrictions contained in the applicable Documents; or

D. In an emergency where waiting to obtain the approval of the Owners creates a substantial risk of irreparable injury to the Land or to Owners(s).

3.4 DEVELOPER APPROVALS. If Developer holds Lots within NORTON LAKE for sale in the ordinary course of business, none of the following actions may be taken without approval in writing by Developer:

A. Assessment of Developer as an Owner for capital improvement; and

B. Any action by the Association that would be detrimental to the sale of Lots or homes by Developer. The determination as to what actions would be detrimental to sales shall be in the sole discretion of Developer.

ARTICLE IV

USE AND MAINTNENCE OF THE LAND AND MAINTENANCE OF OPEN SPACES

4.1 COVENANTS FOR USE. Each owner, by acceptance or a deed or other instrument of conveyance conveying a Lot within NORTON LAKE whether or not it shall be so expressed in such deed or instrument, covenants and agrees that the home and the Lot shall be used, held, maintained and conveyed solely in accordance with the covenants, reservations, easements, restrictions and lien rights regarding same as are or may be set forth in the applicable Documents including, but not limited to, this Declaration and all applicable Supplemental Declarations. No Owner shall in any way damage, injure or impair the Common Elements.

4.2 MAINTENANCE AND REPAIR OF LAND. The maintenance and repair of the Land is either the responsibility of the Owners or the Association as herein after more particularly set forth:

A. Maintenance of Lots. Except as set forth hereinafter regarding ordinary lot maintenance, each Owner shall maintain in good condition and repair at his own expense:

1. All portions of his Lot and home. This obligation includes the obligation to paint and maintain the exterior portions of an owner's home, however, before painting the exterior of a home, other than the original approved color, the Owner must obtain ARB approval.

2. All utility lines, ducts, conduits, pipes, wires and other utility fixtures and appurtenances which are located upon or under his Lot and which service only his home. All utilities shall be located underground except for those appurtenances that must necessarily be located above ground.

3. All glass and screens in windows and doors, in a manner consistent and in uniformity with the standards promulgated by the Association.

4. Landscape. All residents shall be required to submit landscape plans to the ARB for approval. All residents shall, at a minimum, include planting beds in the front yard and they shall seed or sod the remainder with turf grass. The landscaping shall be completed within six months following the issuance of any occupancy permit or as soon as reasonably possible the next planting season. The ARB reserves the right to disapprove any landscaping and require changes or alterations thereto if need be.

B. Owner Responsibilities. Each owner shall perform promptly all such maintenance and repairs and shall be liable for any damages that arise due to his failure to perform such maintenance and repairs. Furthermore, should the Owner neglect to perform such maintenance and repair, the Association shall have the right to have maintenance performed by its agents or employees and the Owner in questions shall be liable to the Association for the cost and expense so incurred and shall be subject to a special assessment therefore.

C. Notification to Association. Each Owner shall promptly report to the Association any defect known to such Owner which required repair of the property for which the Association or a party other than that Owner if responsible.

4.3 CONSTRUCTION OF ARBOR CREEK CONNECTION: At such time as the Village shall direct, the Developer (or HOA as the case may be) shall construct the connection to the same standards as the bike paths in NORTON LAKE.

4.4 MAINTENANCE AND REPAIR OF OPEN SPACES. Maintenance and repair of Open Spaces and any improvements located thereon is the responsibility of the Association including landscape maintenance and drainage maintenance.
The Association shall make reasonable efforts to keep the lake in the Open Space free from algae and weeds. SSA #4 exists to ensure these obligations are met to the satisfaction of the Village.

ARTICLE V

ASSOCIATION EXPENSES

In order to fulfill the covenants contained in the Declaration and in order to maintain and operate the Open Spaces for the use, safety, welfare and benefit of Owners, their families, invitees, guests and lessees there is hereby imposed upon each Lot and its Owners the affirmative covenant and obligation to pay the Association (in the manner set forth in Article VI hereof), and upon the Association, the obligation to assess, collect and expend, the Association Expenses, for those Association expenses described in this Declaration, including the following:

5.1 OPEN SPACE.

A. Taxes. Any and all taxes levied or assessed at any and all times upon the Open Spaces by any and all taxing authorities, including all taxes, charges, assessments and impositions and liens for public improvements, special charges and assessments, and water drainage districts and, in general, all taxes and tax liens which may be assessed against the Open Spaces and against any and all personal property and improvements which are or which hereafter may be placed thereon, including any interest, penalties and other charges which may accrue on such taxes.

B. Utility Charges. All charges levied for utilities providing services for the Open Spaces, whether supplied by a private or public firm including, without limitation, all charges for water, gas, electricity, telephone, sewer and any other type of utility or service charge.

C. Insurance. The premiums on any policy or policies of insurance required to be obtained by the Association under this Declaration of the Documents.

D. Maintenance, Repair and Replacement. Any and all expenses necessary to:

1. Maintain and preserve the Open Spaces (including such expenses as grass cutting, tree trimming, bank stabilization, and other landscape maintenance, operating and maintaining sprinklers and the like); and

2. To keep, maintain, repair and replace any and all improvements upon the Open Space in a manner consistent with the development of NORTON LAKE, the covenants and restrictions contained herein, and all orders, ordinances, rulings and regulations of any and all authorities having jurisdiction as well as the statutes and laws of the State of Illinois and the United States, including but not limited to Village of Campton Hills Planned Unit Development Ordinance No. 10-31.

E. Administrative Expenses. The costs of administration for the Association, including any secretaries, bookkeepers and other employees necessary to carry out the obligations and covenants of the Association under this Declaration, notwithstanding the fact that some of these services may be expended in proving services to or collecting sums owed by particular Owners. In addition, the Association may retain a managing company, which shall initially be NORTON LAKE DEVELOPMENT, LLC, or contractors to assist in the operation of the Association and to perform or assist in the performance of certain obligations of the Association

hereunder. The fees or costs of any management company or contractor so retained shall be deemed to be part of the Open Space Expenses.

F. Indemnification. The costs of the Association to indemnify and save harmless Developer from and against any and all claims, suits, actions, damages and/or causes of action arising from any personal injury, loss of life and/or damage to property sustained in or about the Open Spaces or the appurtenances thereto; from and against all costs, counsel fees, expenses and liabilities incurred relating to any such claim or in settlement thereof, the investigation thereof or the defense at any levels of any action or proceeding brought thereon, and from and against any order, judgments and/or decrees which may be entered therein. Included in the foregoing provisions for indemnification are any expense that Developer may be compelled to incur in bringing suit for the purpose of enforcing rights hereunder, or for the purpose of compelling the specific enforcement of the provisions, conditions, covenants and restrictions contained in the Declaration to be kept and performed by the Association and/or the Owners, including the payment of Association Expenses.

Further, the costs of the Association of indemnifying its Officers and members of the Board of Directors for all costs and expenses whatsoever incurred in the pursuance of their duties, obligations and functions hereunder and in any legal defense of such actions or in settlement thereof including, without limitation, counsel fees and costs at all levels of any trial or appeal or other proceeding, costs of investigation and discovery, etc. Nothing in the provisions of this Paragraph shall require an Institutional Mortgagee to pay any Association Expenses or portion thereof attributable to costs to the Association to indemnify and save harmless Developer in accordance with such Paragraph. Any such Association Expenses shall be reallocated amongst the Owners other than the Institutional Mortgagees.

G. Enforcement. Any and all expenses incurred by the Association in enforcing any of the covenants, restrictions, terms and conditions of the Declaration or incurring any default, violation or failure to perform or abide by such covenants, restrictions, terms and conditions.

H. Reserve Funds. The costs to establish, at the discretion of the Association, an adequate reserve fund for replacement and/or capital refurbishment of the Open Spaces in amounts determined proper and sufficient by the Association. Each Owner acknowledges, understands and consents that such reserve funds are the exclusive property of the Association as a whole and that

no Owner shall have any interest/claim or right to any reserve funds. The Association shall be responsible for maintaining the reserve funds in a separate reserve account and to use such funds only for capital costs and expenses as aforesaid. Following turn-over to the Association, the Association shall within 3 months of the end of the fiscal year, deliver a report to the Village setting forth the amount of reserves as of the end of the fiscal year and information demonstrating the adequacy of said reserves.

I. Miscellaneous Expenses. The costs of all items and expenses pertaining to or for the benefit of the Open Spaces or any part thereof, or the Association not herein specially enumerated and which is determined to be a Common Area Expense by the Association including, but not limited to, the cost of refuse collection if billed to the Association and not individual Owners and the cost of providing security services to NORTON LAKE in the event the Board of Directors elects to provide such services.

ARTICLE VI

METHOD OF DETERMINING ASSESSMENT OF ASSOCIATION EXPENSES

6.1 ASSESSMENTS. It is hereby declared, and all Owners and the Association agree, that the Association Expenses shall be disbursed by the Association out of funds assessed and collected from assessments paid by all Owners in NORTON LAKE.

6.2 DETERMINING INDIVIDUAL ASSESSMENTS.

A. As provided in the Bylaws of the Association, the Board of Directors shall prepare an annual estimated Budget which shall reflect the annual common expense described in Article V. Thereupon the Board of Directors shall allocate to all NORTON LAKE residential Lots an equal share of the said annual Common Expenses. The share of the Annual Association Expenses allocated to an Owner is the "Individual Assessment" for each Lot.

B. The Individual Assessment shall be payable at such time as the Board of Directors determines.

6.3 LIABILITY OF OWNERS FOR INDIVIDUAL ASSESSMENTS. By the acceptance of a deed or other instrument of conveyance of a residential Lot in NORTON LAKE, each Owner thereof acknowledges that each residential Lot and the Owners thereof are jointly and severally liable for their own Individual Assessment as provided for herein. Accordingly, subject to such specific limitations, it is recognized and agreed by each Owner for himself and his heirs, executors, successors and assigns, that in the event Owners fail or refuse to pay their Individual Assessment or any portion thereof or

their respective portions, then the other Owners may be responsible for increased Individual Assessments due to the nonpayment by such other Owners, and such increased Individual Assessment can and may be enforced by the Association and the Developer in the same manner as all other assessments hereunder as provided in this Declaration.

ARTICLE VII

ESTABLISHMENT AND ENFORCEMENT OF LIENS

7.1 LIENS. Any and all Individual Assessments for Association Expenses, and Special Assessments and all installments thereof (collectively the "Assessments") with interest thereon at the highest rate allowed by law and costs of collection, including attorneys' fees are hereby declared to be a charge and continuing lien upon Lot and the home against which each such Assessment is made. Each Assessment against a Lot and the home, together with interest thereon at the highest non-usurious rate allowed by law (and if not such rate specified by law, then at eighteen percent (18%) per annum) and costs of collection thereof, including attorneys' fees, shall be the personal obligation of the person, persons or entity owning the Lot and/or home assessed. As to Institutional Mortgagees, said lien shall be effective only from and after the time of recordation amongst the Public Records of the County, of a written, acknowledged statement by the Association setting forth the amount due to the Association as of the date the statement is signed. Upon full payment of all sums secured by that lien, the party making payment shall be entitled to a recordable satisfaction of the statement of lien. Where an Institutional Mortgagee obtains title to a Lot or home as a result of foreclosure of its mortgage or deed given in lieu of foreclosure, such acquirer of title, its successors, and assigns, shall not be liable for the share of Assessments pertaining to such Lot and/or home or chargeable to the former Owner which become due prior to the acquisition of title as a result of the foreclosure, unless such share is secured by a claim of lien for Assessments that is recorded prior to the recording of the foreclosed mortgage. Such unpaid share of Assessments shall be added to the Assessments collectible from all other Lots and homes. The foregoing shall not excuse an Institutional Mortgagee from payment of Assessments pertaining to a Lot and/or home which accrue during the period of ownership of such Lot and/or home by such Institutional Mortgagee whether or not such Lot and/or home is occupied.

7.2 ENFORCEMENT. In the event any Owner shall fail to pay Assessments or any installment thereof charged to his Lot within fifteen (15) days after the same becomes due ("Delinquent Owner"), then the Association, through its Board of Directors, shall have the right to utilize any of the following remedies to the extent permitted by law:

A. To accelerate the entire amount of any Assessments for the remainder of the calendar year notwithstanding any provisions for the payment thereof in installments.

B. To advance, on behalf of the delinquent owner, funds to accomplish the needs of the Association. The amount or amounts of monies so advanced, including reasonable attorneys' fees and expenses which might have been reasonably incurred because of or in connection with such advance, and also including costs and expenses of the Association incurred in any borrowing of funds to advance the payment of expenses and together with interest at the highest non-usurious rate allowable by law (and if no such rate is specified by law, then eighteen percent (18%) per annum), may thereupon be collected or enforced by the Association and such advance or loan by the Association shall not waive the default.

C. To place of record a claim for lien against the home and/or Lot of the Delinquent Owners.

D. To file an action in equity to foreclose its lien at anytime after the effective date thereof. The lien may be foreclosed by an action in the name of the Association in like manner as a foreclosure of a mortgage on real property.

E. To file an action at law to collect said Assessment plus interest at the highest non-usurious rate allowable by law (and if no such rate is specified by law, then at eighteen percent (18%) per annum) plus court costs and attorneys' fees without waiving any lien rights and/or rights of foreclosure in the Association.

7.3 COLLECTION BY DEVELOPER. In the event for any reason the Association fails to collect the Assessments, then in that event Developer, until the Developer no longer owns a Lot, shall have the right to collect the same in the same manner as the Association.

ARTICLE VIII

INSURANCE

8.1 OPEN SPACE INSURANCE. The Association shall purchase the following coverage for the Open Spaces subject to the following provisions:

A. Liability Insurance. The costs of the policy or policies of insurance in the form generally known as Public Liability and/or Owners' policies insuring the Association against any and all claims and demands made by any person or persons whomsoever for injuries received in connection with the use, operation and maintenance of Open Spaces and improvements and buildings

located thereon, or for any other risk insured against by such policies which the Association, in it sole discretion, determines to insure against. Each policy purchased by the Association shall have limits of not less then Three Million Dollars ($3,000,000) or such other amount as may be determined from time to time by the Association covering all claims for personal injury and One Hundred Thousand ($100,000) or such other amount as may be determined from time to time by the Association for property damage arising out of a single occurrence. The coverage of the liability insurance policies purchased by the Association shall include protection against liability for property damage, bodily injuries and deaths of person in connection with the operation, maintenance or use of the Open Spaces, legal liability arising out of law suits related to employment contracts of the Association, water damage liability, liability for non-owned and hired automobiles, liability of hazards related to usage and liability for property of others. All such policies will name the Association (and Developer for so long as Developer shall own any portion of the Open Spaces as their respective interest may appear) as the insured under such policy or policies. The insurance purchased shall contain a "severability of interest endorsement", or equivalent coverage, if such endorsement is reasonably obtained, which would preclude the insurer from denying the claim of an Owner because of the negligent acts of either the Association, the Developer or any other Owners or deny the claim of either the Developer or the Association because of the negligent acts of an Owner.

Casualty Insurance. The costs of the policy or policies if insurance to allow the Association to insure any improvements now located or which may hereafter be located, built or placed upon the Open Spaces against loss or damage caused by or resulting from at least the following: Fire and other hazards covered by the standard extended coverage endorsement, sprinkler leakage, windstorm, vandalism, malicious mischief, water damage, debris removal and demolition, and such other risks as the Association shall determine are customarily covered with respect to developments similar to NORTON LAKE in construction, location and use.

8.2 MISCELLANEOUS INSURANCE. The Association may also obtain such forms of insurance and in such coverages as the Association shall determine for the protection and preservation of the Open Spaces. Such insurance may include without limitation, workmen's compensation insurance and flood insurance, and fidelity coverage to protect against dishonest acts of the officers, directors and employees of the Association.

ARTICLE IX

GRANT AND RESERVATION OF EASEMENTS

As the Owner of those portions of the Land committed or which may be committed to the terms hereof, Developer hereby reserves and grants the following easements over and across the Land for the duration of the term of this Declaration (except as hereafter provided) and for the benefit of the parties or properties as hereinafter specified for the following purposes:

9.1 RIGHTS-OF-WAY. A perpetual nonexclusive easement is hereby declared, granted and reserved in favor of Developer, the Association, and Owners, their lessees and family members, guests and invitees over and upon the walks, road right-of-way, and other rights-of-way within the Open Spaces to provide ingress, egress and access to and from, through and between the Land and publicly dedicated roads.

9.2 RIGHTS OF ASSOCIATION TO ENTER UPON THE LAND. An easement or easements for ingress and egress in favor of the Association and its Board of Directors or the designees of the Association to enter upon each portion of the Land for the purpose of fulfilling its duties and responsibilities of ownership, administration, maintenance and repair in accordance with the Documents.

9.3 USE AND ENJOYMENT OF OPEN SPACES. A nonexclusive easement for the use, education, pleasure and recreation and for access over and to the Open Spaces on behalf of Developer, the Association, Owners and the public.

9.4 EASEMENT FOR OWNERS WITHIN NORTON LAKE. An easement over and to the Open Spaces in favor of the owners of any residential dwelling unit now or hereafter located upon any portion of NORTON LAKE for purposes of ingress and egress across, over and upon the Open Space and the private roadways located or to be located thereon to and from publicly dedicated rights-of-way.

ARTICLE X

ENFORCEMENT

The covenants and restrictions contained in these Documents may be enforced by Developer, the Association, and any Owner in any judicial proceeding seeking any remedy recognizable at law or in equity, including damages, injunction or any other form of relief against any person, firm or entity violating or attempting to violate any covenant or restriction hereunder. The failure by any party to enforce any covenant, restriction or easement herein contained shall in no event be deemed a waiver of such covenant, restriction or easement or of the right of such party to thereafter enforce such covenant, restriction or easement. The prevailing party in any such litigation shall be entitled to reasonable attorneys' fees.

ARTICLE XI

AMENDMENT AND MODIFICATION

11.1 In addition to amendments provided for elsewhere, this Declaration may be amended at any regular or special meeting of the Owners called and held in accordance with the Bylaws by the affirmative vote of the Owners owning Sixty Seven Percent (67%) of the Lots and the Developer if Developer is still in control of the Association. An Amendment to the Declaration shall be evidenced by a certificate executed by the Association. A true copy of such amendment shall be sent by certified mail and first class mail by the Association to Developer and all Institutional Mortgagees ("Mailing"). The amendment shall become effective upon the recording of the certificate amongst the Public Records of the County, but the certificate shall not be recorded until thirty (30) days after the Mailing, unless such thirty (30) day period is waived in writing by Developer and all Institutional Mortgagees.

11.2 Whenever it shall appear to the Association that there is a technical or minor defect, error or omission in the Declaration, the Association, through its Board of Directors, may amend the Declaration. The amendment shall become effective upon the recording of a certificate with the Recorder of Deeds.

11.3 Prior to the conveyance of all of the Lots, Developer may amend this Declaration provided that such amendment does not materially and adversely affect any property rights of any Owner other than Developer. Such an amendment may be signed solely by Developer.

11.4 Notwithstanding anything contained in this Declaration, the Developer in its sole discretion without the consent of any Owners or the Association may execute and record a Supplemental Section Declaration to the Declaration declaring additional Land within NORTON LAKE to be subject to all of the terms, conditions, rights and obligations of Owners of Lots or homes on the Land already committed, including a Supplemental Declaration for Unit 2 and Lots 107 and 108. It is specifically anticipated that the land within NORTON LAKE will be submitted to this Declaration.

11.5 No amendment shall be adopted which shall materially impair or prejudice the rights or priorities of Developer, the Association and any Institutional Mortgagee under this Declaration without the specific written approval of Developer, the Association or any Institutional Mortgagee affected thereby, nor shall any amendment which would affect the surface water management system, including the water management portions of the Open Spaces, be made without the prior approval of the Village of Campton Hills.

11.6 The following amendments shall require the affirmative votes of the Owners owning at least seventy percent (70%) of the Lots.

A. Amend Article VI of this Declaration to change the method of determining the obligations, assessments, or other charges which may be levied against any owner;

B. Amend Article VIII of this Declaration to decrease the minimum insurance requirements.

ARTICLE XII

TERM

This Declaration and the terms, provisions, conditions, covenants, restrictions, reservations, regulations, easements, burdens and liens contained herein, including without limitation, the provisions for assessment of a home shall run with and bind the Land and inure to the benefit of Developer, the Association, Owners and their respective legal representatives, heirs, successors and assigns for a term of twenty-five (25) years from the date of the recording of this Declaration amongst the Public Records of the County, after which time this Declaration shall be automatically renewed and extended for successive periods to ten (10) years each, unless at least one (1) year prior to the termination of such twenty-five (25) year term or of any such ten (10) year extension thereof, there is recorded amongst the Public Records of the County, an instrument signed by the then Owners owning two-thirds (2/3) of the residential Lots and all Institutional Mortgagees in existence one (1) year prior to the termination of such term or extension agreeing to terminate this Declaration, upon which event this Declaration shall be terminated upon the expiration of the twenty-five (25) year term or the ten (10) year extension during which such instrument of termination is recorded.

ARTICLE XIII

GENERAL PROVISIONS

13.1 NOTICES. Any notices or other communication required or permitted to be given or delivered hereunder shall be deemed properly given and delivered upon the mailing thereof any United States mail, postage prepaid, to: (i) any Owner, to the last known address of the person whose name appears as the Owner on the records of the Association at the time of such mailing; (ii) the Association at such address as the Association shall hereafter notify Developer and all Owners of in writing; and (iii) Developer at 888 Fox Glen Drive, St. Charles, IL 60174, or such other address or addresses as Developer shall hereafter notify the Association of in writing--any such notice to the Association of a change in Developer's address is deemed notice to the Owners.

13.2 CAPTIONS. Article and Paragraph captions inserted throughout this Declaration is intended only as a matter of convenience and for reference only and in not way shall such captions or headings define, limit or in any way affect any of the terms and provisions of Declaration.

13.3 CONTEXT. Whenever the context so requires, any pronoun used herein

may be deemed to mean the corresponding masculine, feminine or neuter from thereof and the singular form of any nouns and pronouns herein may be deemed to mean the corresponding plural form there of and vice versa.

13.4 SEVERABILITY. In the event any one of the provisions of this Declaration shall be deemed invalid by a court of competent jurisdiction, said juridical determination shall in no way affect any of the other provisions hereof which shall remain in full force and effect. Further, the invalidation of any of the covenants or restrictions or terms and conditions of this Declaration or a reduction in the term of the same by reason of the rule of law knows as the "rule against perpetuities" shall in no way affect any other provision which shall remain in full force and effect for such period of time as may be permitted by law.

13.5 MANAGEMENT. The Association, pursuant to resolution duly adopted by its Board of Directors, shall have the continuing authority to delegate all or any portion of its responsibilities for maintenance, operation and administration, as provided herein, to a managing agency, which initially shall be NORTON LAKE DEVELOPMENT, LLC, or another entity selected by the Board of Directors from time to time.

13.6 ATTORNEYS' FEES. Any provision herein for the collection or recovery of attorneys' fees shall be deemed to include, but not be limited to, court costs and attorneys' fees for the attorneys' services at all trial and appellate levels and post judgment proceedings and, unless the context clearly indicates a contrary intention, whether or not suit is instituted.

13.7 INTERPRETATION. In the event of a conflict between the provisions of this Declaration and the Articles and Bylaws, the provisions of the Declaration shall control.

13.8 RULE AGAINST PERPETUITIES. In the event any court should hereafter determine any provisions as originally drafted herein are in violation of the rule of property knows as the "rule against perpetuities" or any other rule of law because of the durations of the period involved, the period specified in the Declaration shall not thereby become invalid, but instead shall be reduced to the maximum period allowed under such rule of law, and for such purpose, "measuring lives" shall be those of the signatories hereof.

ARTICLE XIV

Anything in this document to the contrary not withstanding this Article XIV and the following sections of this document shall not be amended without concurrence of the Village of Campton Hills evidenced by the adoption of a Resolution approved by a majority of the Corporate Authorities then holding office: 2.1, 2.2, 4.3, 4.4, 5.1(h), 11.1, 11.3, 11.5, and ARTICLE XIV.

IN WITNESS WHEREOF, this Declaration of Covenants, Restrictions and Easements have been signed by Owner and Developer on the day and year first above set forth.

/SIGNATURE PAGE TO FOLLOW/

NORTON LAKE DEVELOPMENT, LLC

By: Its Manager: Hudson T. Harrison

STATE OF ~~ILLINOIS~~ Florida)
) S.S.
COUNTY OF ~~KANE~~ Collier)

I hereby certify that on this day, before me, an office duly authorized in the State aforesaid and in the County aforesaid, to take acknowledgements, personally appeared Hudson T. Harrison, Manager of Norton Lake Development, LLC, and who is to me known to be the person described in and who executed the foregoing instrument and he acknowledged before me that he executed same.

WITNESS my hand and official seal in the County and State last aforesaid, this 11th day of January, 2010.

Notary Public

MITZI T. SCOTT
Notary Public, State of Florida
Commission# DD728646
My comm. expires Oct. 24, 2011

EXHIBIT F

Parcel 2 of Unit No. 2 Fox Mill, in Campton Township, Kane County, Illinois.

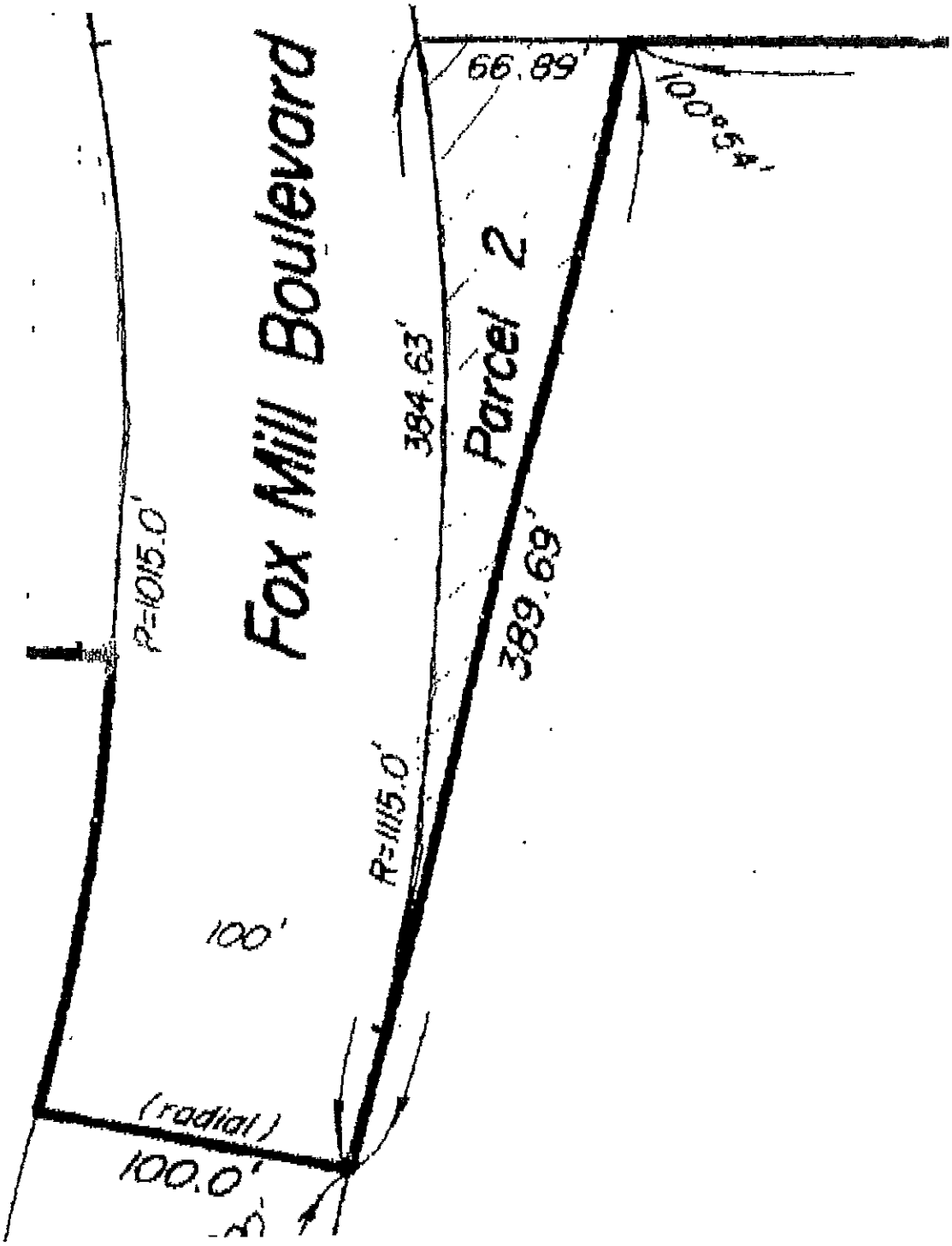

EXHIBIT G

PER EXHIBIT C, TITLE 9, CHAPTER OF VILLAGE ORDINANCE

SCHOOL POPULATION PER DWELLING UNIT

LAND & CASH DONATIONS

LAND DONATION

2.134 acres x $195,000 = $416,130 / 106 Lots = $3,925.75

CASH DONATION AT BUILDING PERMIT

3 BEDROOM

ELEMENTARY	MIDDLE	HIGH SCHOOL	TOTAL ACRES PER LOT	CASH DUE AT PERMIT	
.369 X .025 ac. = .009225	.175 x .0389 ac. = .0068075	.184 x .072 ac. = .013248	0.0292805	.0292805 x $195,000 =	$ 5,709.70
				Less: Land Donation per Lot	$ 3,925.75
				PAYMENT REQUIRED	**$ 1,783.95** +CPI

4 BEDROOM

ELEMENTARY	MIDDLE	HIGH SCHOOL	TOTAL ACRES PER LOT	CASH DUE AT PERMIT	
.530 X .025 ac. = .01325	.298 x .0389 ac. = .0115922	.360 x .072 ac. = .02592	0.0507622	.0507622 x $195,000 =	$ 9,898.63
				Less: Land Donation per Lot	$ 3,925.75
				PAYMENT REQUIRED	**$ 5,972.88** +CPI

5 BEDROOM

ELEMENTARY	MIDDLE	HIGH SCHOOL	TOTAL ACRES PER LOT	CASH DUE AT PERMIT	
.345 X .025 ac. = .008625	.248 x .0389 ac. = .0096472	.300 x .072 ac. = .0216	0.039877	.0398722 x $195,000 =	$ 7,775.08
			-0.0201321	Less: Land Donation per Lot	$ 3,925.75
			0.0197401 x $195,000	**PAYMENT REQUIRED**	**$ 3,849.33** +CPI